BLANCO

BLANCOLINUS Silgranit HD

Safety and hygiene BLANCO mixer taps

DVGW Certification



≤ 70°C
≤ 158°F

≤ 10 bar
≤ 145 psi



1

BLANCOLINUS Silgranit HD

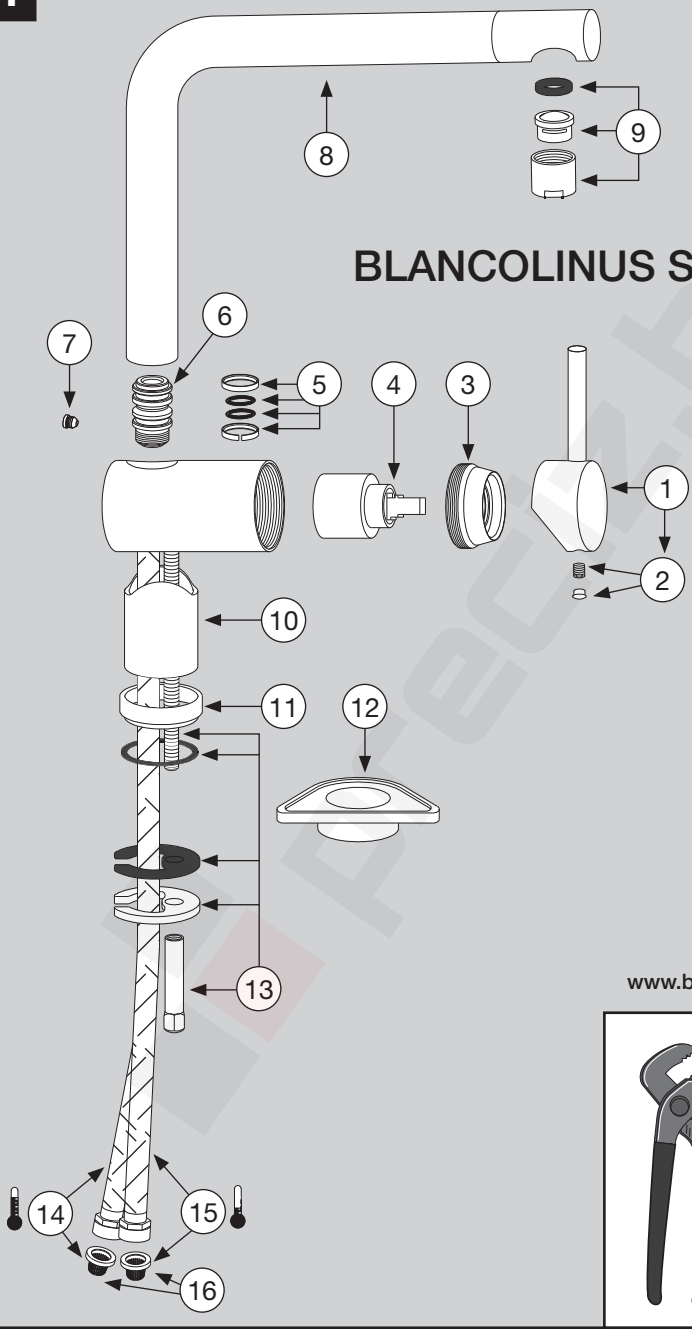

www.blanco-germany.com/sos

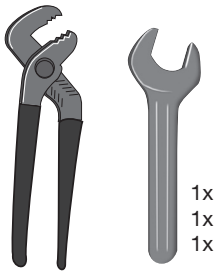

1x 12 mm
1x 19 mm
1x 22 mm

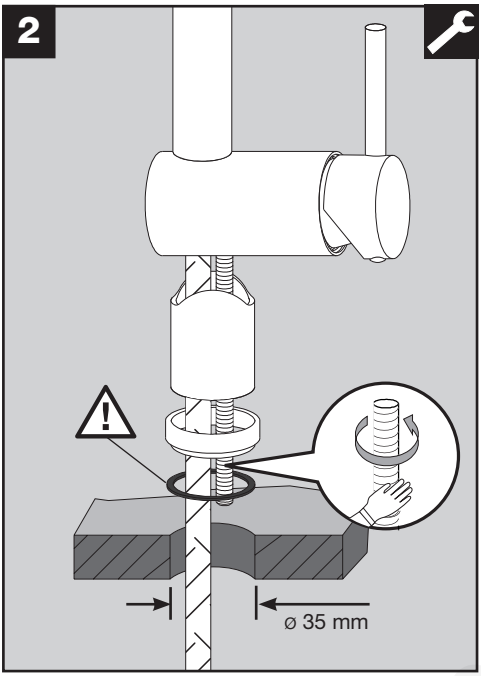
2
ø 35 mm

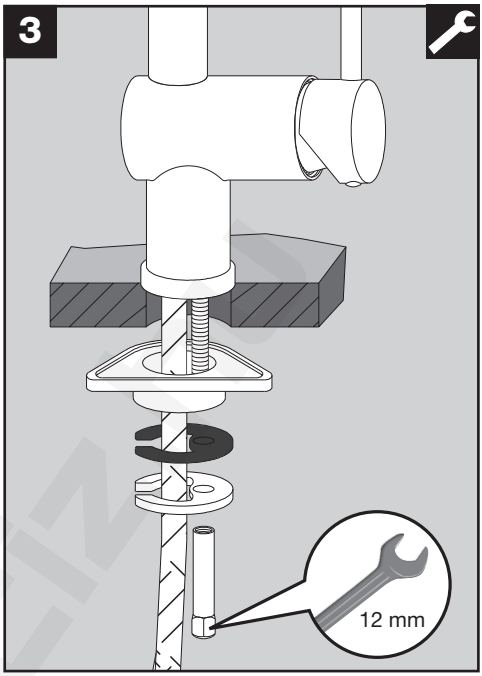
3
12 mm

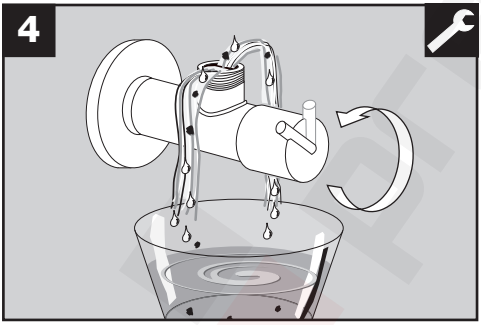
4

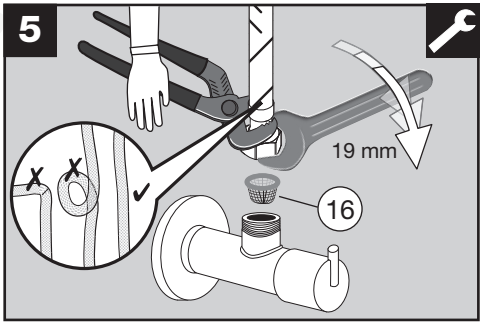
5
19 mm
16

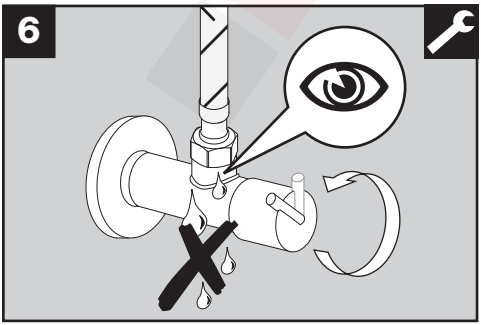
6

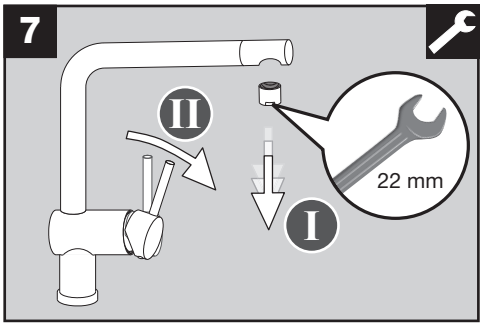
7
II
I
22 mm

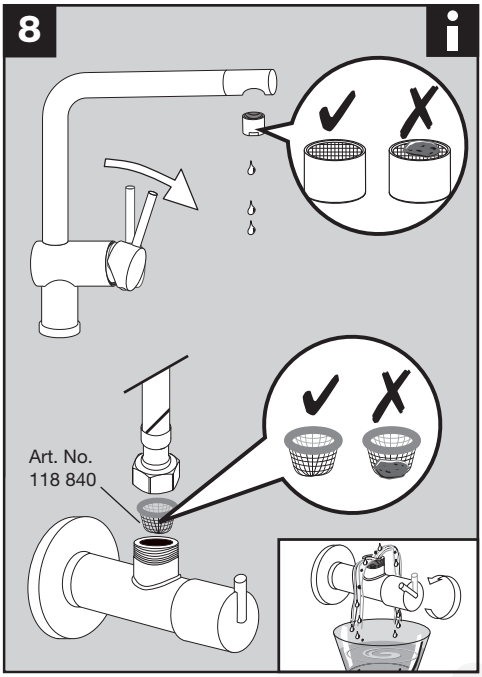

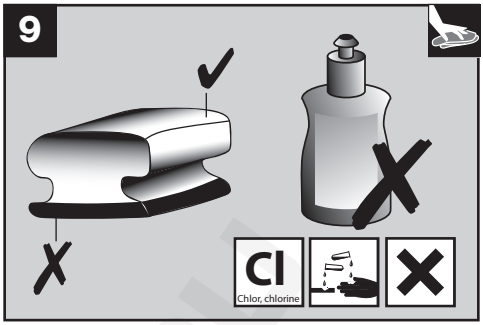

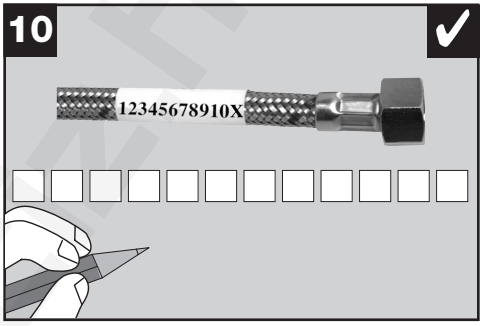

BLANCO

BLANCO GmbH + Co KG
Technischer Kundendienst
Tel.: +49 7045 44-81 419
info@blanco-germany.com
www.blanco-germany.com

119 242 01/2013