BLANCO

BLANCO LINUS-S HD Silgranit-Look



≤ 70 °C
≤ 158 °F

≤ 10 bar
≤ 145 psi

1

BLANCO LINUS-S HD Silgranit-Look

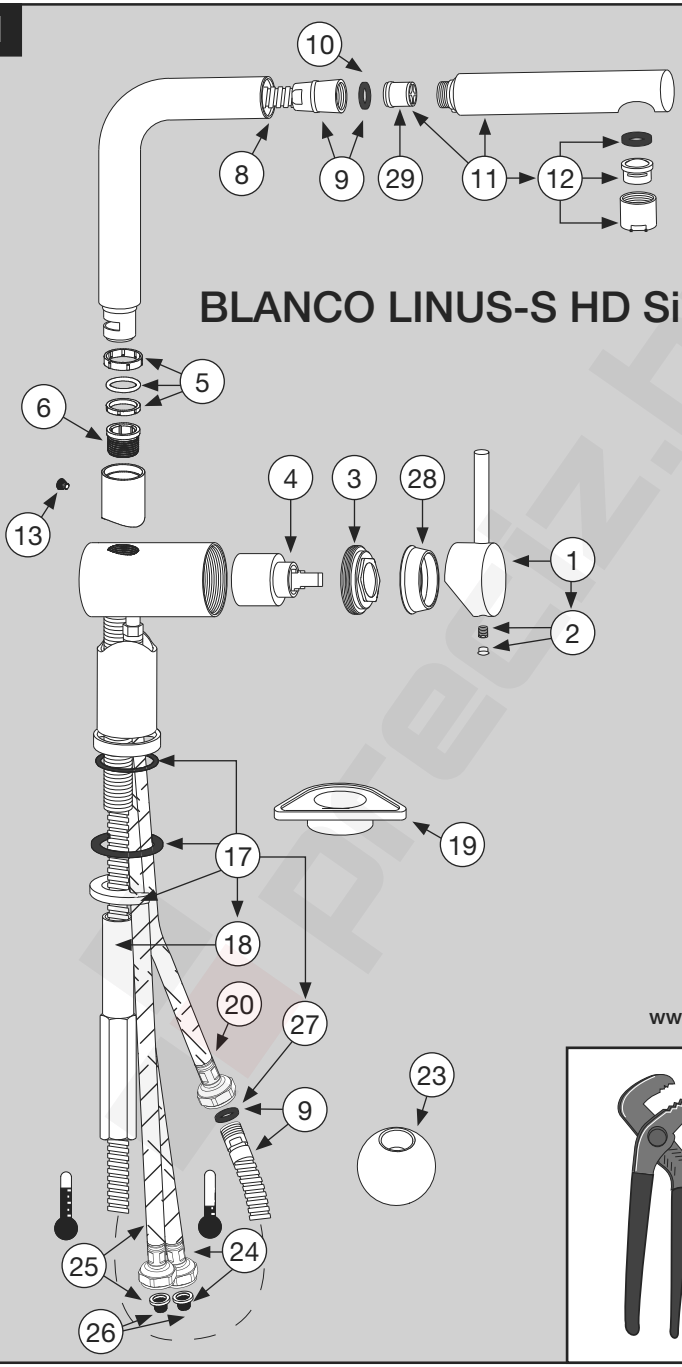

www.blanco.com/sos

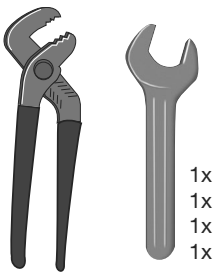

1x 13 mm
1x 19 mm
1x 21 mm
1x 22 mm

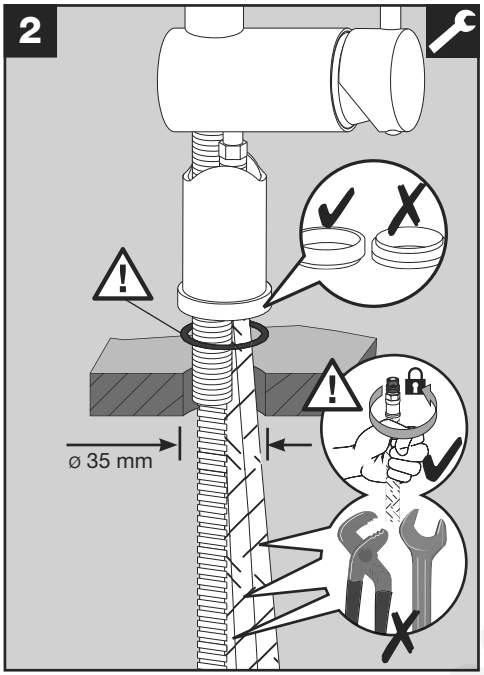
2
ø 35 mm

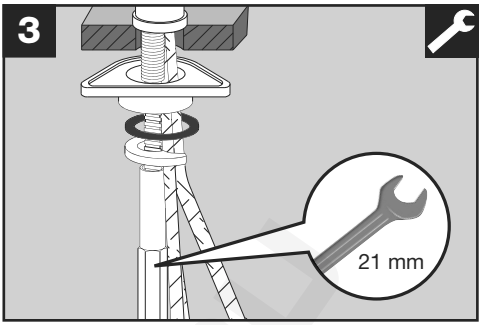
3
21 mm

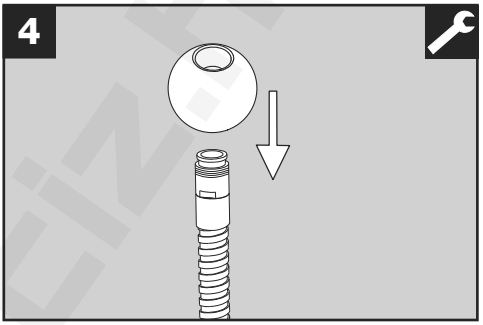
4

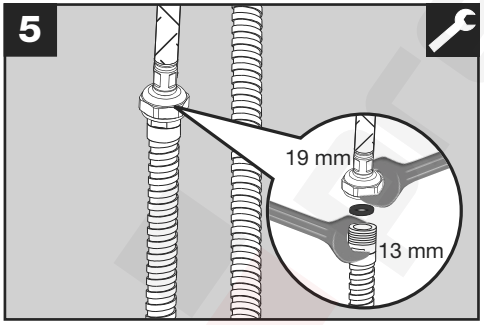
5
19 mm
13 mm

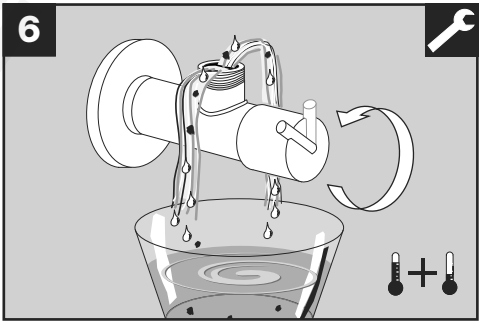
6

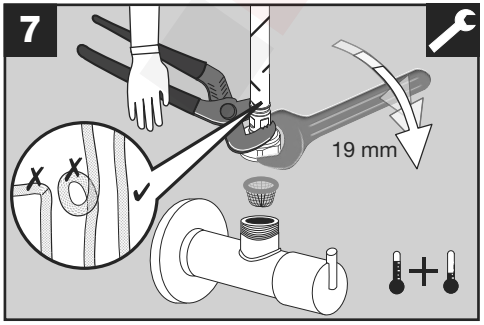
7
19 mm

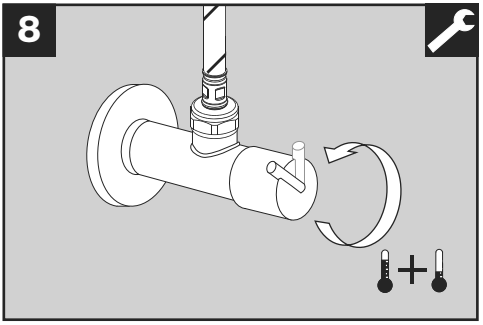
8

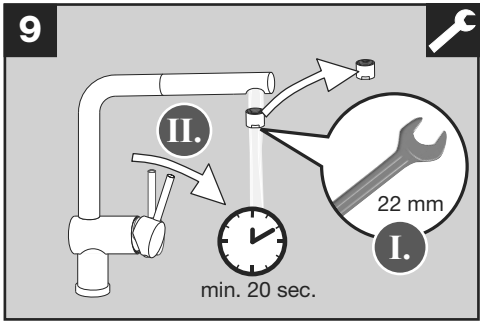
9
II.
22 mm
I.
min. 20 sec.

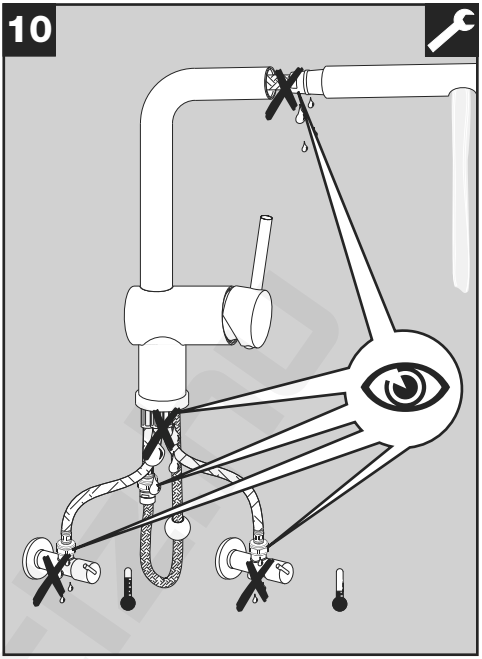
10

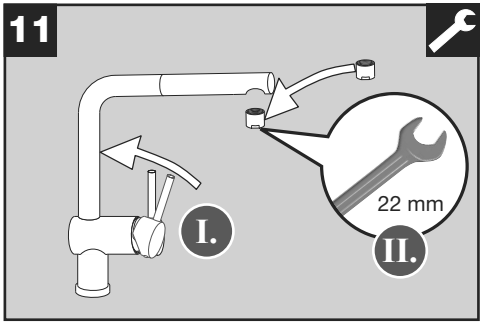
11
22 mm
I.
II.

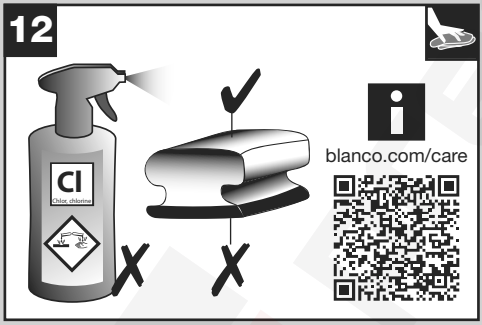
12
Cl
Chlor, chlorine
blanco.com/care

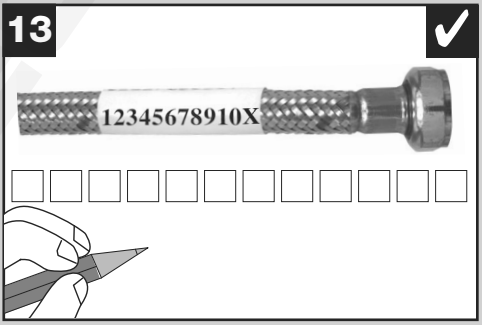
13
12345678910X

